Mounting steps:

1

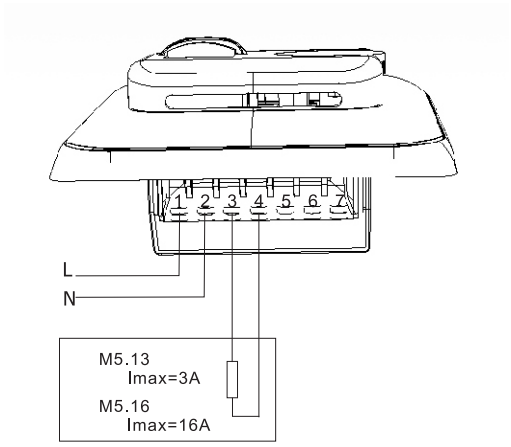

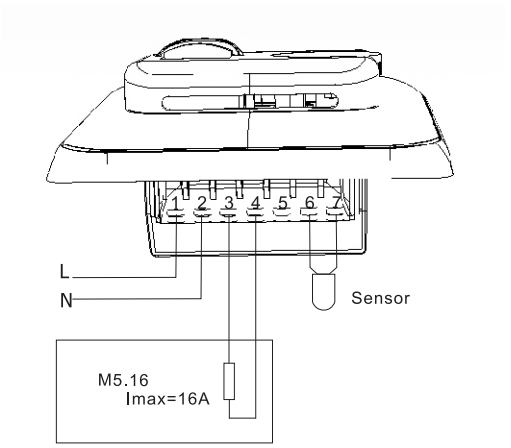

3

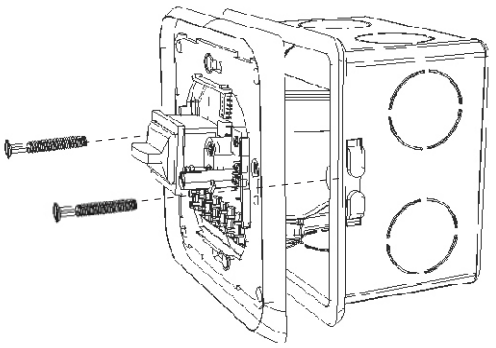

4

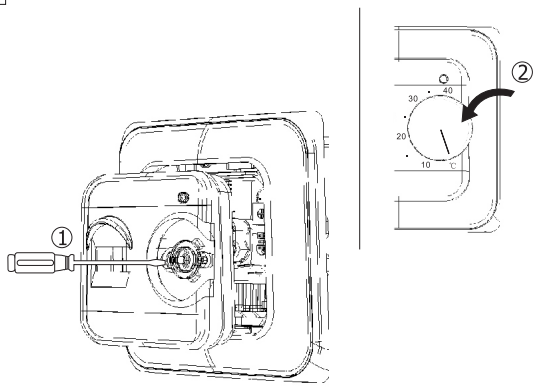

2

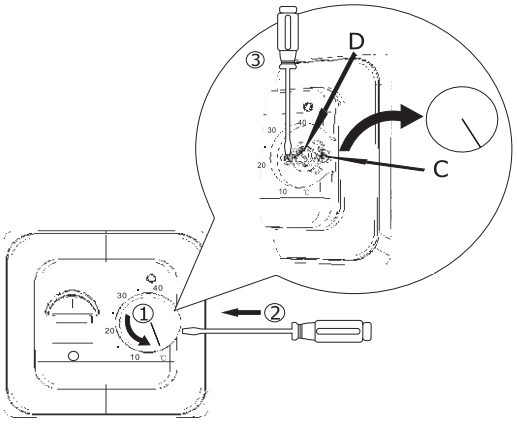

Parts

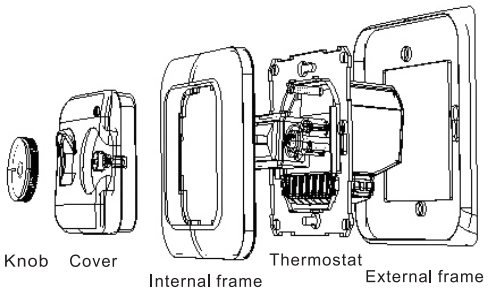

Mounting Instructions

M5.XX electronic heating thermostat

This type electronic thermostat for mounting in standard wall box, the thermostat is adjustable to required temperature from +5/+40C, the LED shows that the heat is On, the thermostat is recommended for control of electric heating devices or on/off valve actuator used in water-based heating systems

Selection Table:

Model	Current	Sensor	Application
M5.13	3A	Built-in sensor	For control of on/off electric or electro-thermal actuator
M5.16I	16A	Built-in sensor	For control of electric heating devices
M5.16	16A	Floor sensor	

Technical data:

Voltage	: AC230V(AC110V /AC24V available)
Power consumption	: 5W
Setting range	: 5℃～40℃
Switching differential	: ±0.5K
Ambient temperature	: -5℃～50℃
Protective housing	: IP20
Housing material	: anti-flammable PC
Floor sensor	: rubber-thermoplastic NTC sensor, cable length is 3m

Dimension:

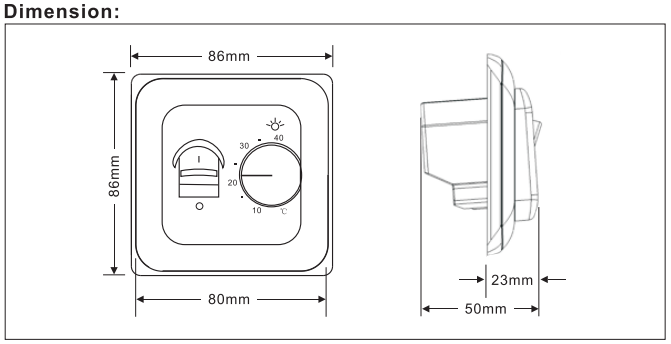

Mounting of Floor Sensor

Floor sensor should be placed in installation pipe which is embedded in floor, the pipe is thickened in the end and placed as high as possible in the concrete layer. Sensor cable may be extended up to 50 m with separate cable for power current. Two conductors in a multi-conducting cable, which e.g. is used for supply of heating cable, may not be used. Voltage signals, which may disturb the function of the thermostat, may occur. If the cable is used with screen, the screen may not be connected to the ground, but must be connected to terminal 7, the best installation is attained with a separate cable for the sensor, which is then mounted in a separate conduit.

Temperature and Value of Floor Sensor

Temperature (℃)	Value (Ω)
5	22070
10	17960
20	12091
30	8312
40	5827

Placement of Thermostat

Thermostat is to be mounted on the wall with free air circulation around it . Furthermore it has to be placed where it is not influenced by any other heating sources (e.g. the sun), draft from doors or windows, or by the temperature of an exterior wall.

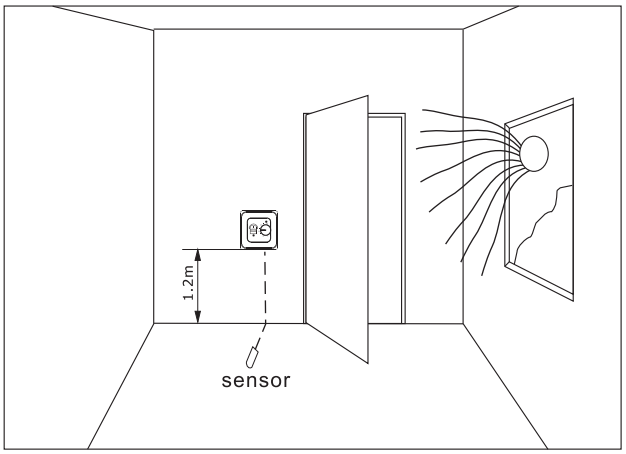

Operation manual:

① On/Off:
I-On, O-Off

② Temperature setting:
5℃～40℃

③ Indicator:
the light is red when heat is on

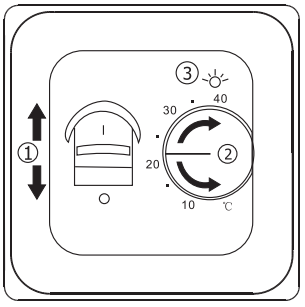

Temperature Setting

Thermostat has a scale range of +5/+40℃. To assist the adjustment, the thermostat has a LED which will glow RED when the heating is ON. The thermostat should be set to maximum temperature setting until the desired temperature of the room or floor is achieved. The control knob should then be turned back until the LED goes out. Fine adjustments can be made over the next 1/2 days to suit individual requirements.

Thermostat Adjustment

When the room temperature has been stabilized, the thermostat set position may be adjusted to match actual room temperature. Measure the temperature of the room with an accurate thermometer. Remove control knob(1) and spin the pole(D), then reposition the control knob so that the indicated temperature line shows the same as the measured temperature (picture 2). We have adjusted the temperature, please do not spin the pole when installation.

Max./Min. Temperature Setting

A locking mechanism is positioned behind the control knob to limit the amount of adjustment possible. By loosening the little screw C (picture2)the scale range can be locked, e.g. Between 20℃ and 25℃. The red ring indicates the maximum temperature and the green ring indicates the minimum temperature.