Weekly circulation digital programming thermostat with LCD touch screen,which has 6-event everyday. Manual mode and programme mode could be selected.The thermostat is recommended for control of electric heating devices or on/off valve actuator used in hydronic floor heating.

Selection Table:

Model	Current	Application
M9.713	3A	Built-in&floor sensor,floor limit sensor weekly programme
M9.723	3A	Built-in&floor sensor,floor limit sensor weekly programme,a potential-free output
M9.716	16A	Built-in&floor sensor,floor limit sensor weekly programme

Parameter:

Voltage:220V/230V
Power comsuption:2W
Setting range:5～90℃(can adjust to 35-90℃)
Limitation setting:5…60℃
(Factory setting:35℃)
Switch differential:0.5-10℃adjustable
factory setting1℃
Ambient temperature:-5～50℃
Protective houseing:IP20
Housing material: anti-flammable PC

User operation:

1）On/Off.“ ⏻ ”
2）At clock-controlled programme mode,press“ ▲ ”or“ ▼ ” enter to temporary control.
3）UP“ ▲ ”,DOWN“ ▼ ”to adjust the temperature value.
4）Press clock “ ◷ ”key for 5 seconds,then enter to clock set, choose modified item by pressing clock“ ◷ ”,press UP/DOWN“▲▼”to modify the date and clock,then switch off to quit.
5）Press menu“ 🕮 ”to choose manual mode or programme mode.
6）Set temperature and clock display alternately,room temperature can be read out directly.
7）Press both “▲ ”“ ▼ ”for five seconds to engage/disengage key-lock function key-lock shows“ 🔒 ”
(“ 🔒 ”this symbol dispeared that shows unlock)

Function:

- Manual mode
- Clock-controlled programme mode
- Heating on
- Wake-up,event 1
- Leave(am),event 2
- Return(am),event 3
- Leave(pm),event 4
- Return(pm),event 5
- Sleep,event 6

Programming:

Press Menu key for 5 seconds to start programming

Key	Event		Symbol	Time	Modify	Temp.	Modify
🕮	Day 1-5	1	☼	06：00	▲ ▼ Event Time	20℃	▲ ▼ Temp.
		2	⌂→	08：00		15℃	
		3	→⌂	11：30		15℃	
☝		4	⌂→	12：30		15℃	
		5	⌂←	17：00		22℃	
		6	☾	22：00		15℃	
	Day 6-7	1	☼	08：00		22℃	
		2	☾	23：00		15℃	

Note:
1) The pre-programmed setpoint(15℃) for event 3&4 is the same as event 2,please reset it according to your individual requirement.
2)Symbol “OFF” will be displayed if the setpoint reaches the minimum set value and the thermostat is switch off in this event.

Advanced setting(qualified person preferred):

Usually finished at mounting thermostat.
Press 🕮 key simultaneously press power on key when in power off.



1ADJ:Temperature calibration
Press＋ or － key to adjust present checked value,adjustable scale:9.9℃.
Re-press menu key to enter to next step.



2SEN:Sensor mode
Press＋or－key to choose senor working mode
IN:built-in, OUT: floor sensor,
ALL:both sensors,floor sensor is the limit sensor
Re-press menu key to enter to next step.

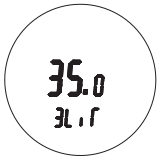

3LIT: Modify limition value
Press＋or－key to modify the temp.
Limit valuelimition range:5~60℃
Re-press menu key to enter to next step.



4DIF:Switch differential setting
Press＋or－key to change switch defferential
Setting range:0.5~10℃.
Re-press menu key to enter to next step.



5LTP:Start anti-frozen function in power off
Press＋or－key to change the present anti-frozen function
Re-press menu key to enter to next step.

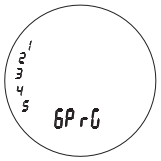

6PRG:Set day off mode
Press + or - to choose day off
5/2 day mode,6/1day mode,7 day mode
Re-press menu key to enter to next step.

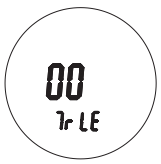

7RLE:Potential-free output and main power output in same/different way.
Press＋or－key to change the present linkage state.
00:in same way, 01:in defferent way
Re-press menu key to enter to next step.



8DLY:Delay time of potential-free output
Press＋or－key to change linkage delay time
Range:0-5min.
Re-press menu key to enter to next step.

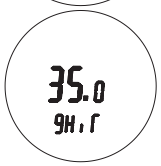

9HIT:Max. Temperature setting
Press＋or－ key to change the Max.value
Range:35-90℃
Re-press menu key to enter to next step.

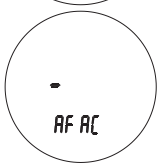

AFAC:Reset to factory setting
Press＋key for 5seconds till showing ---
Reset to factory setting
Swithch off for saving setting

Sensor Failure

E0:Built-in sensor short-circuited or disconnected.
E1:Exernal sensor short-circuited or desconnected.
When shows E0/E1 error,thermostat must be checked till the error is eliminated

Display symbols

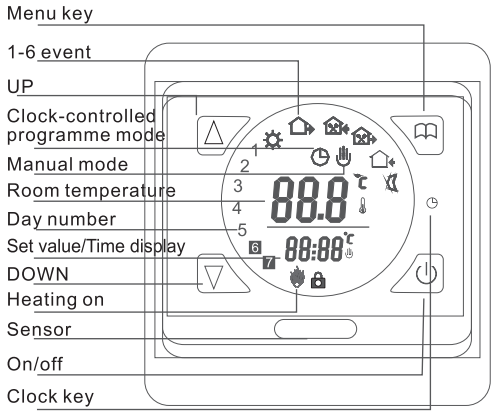

Dimension:mm

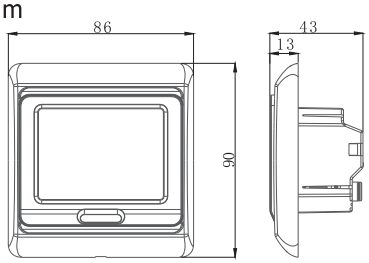

Mounting steps:

1 Release the front cover by inserting a screwdrive into bottom crack.

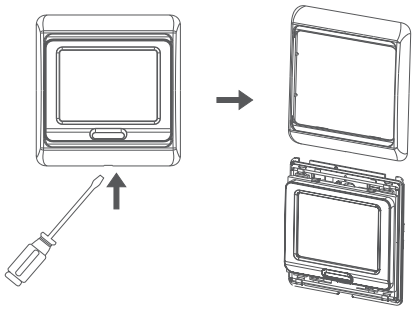

2 Take the backing plate apart according to the following diagram.

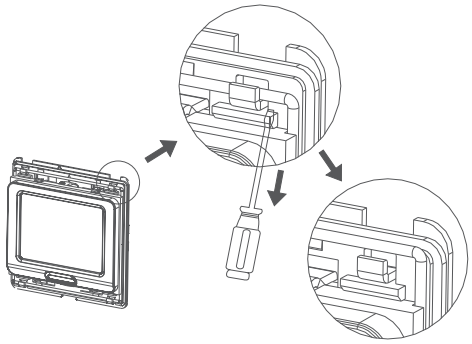

3 Mounted the backing plate in the wall socket by screwdriver.

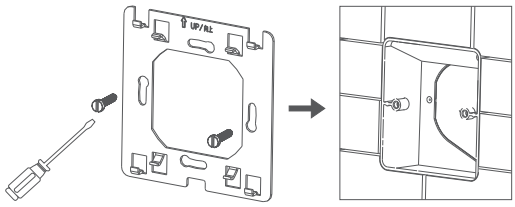

4 After connect wires(see right diagram), the themostat mounte on the backing plate and remounted the cover and frame.

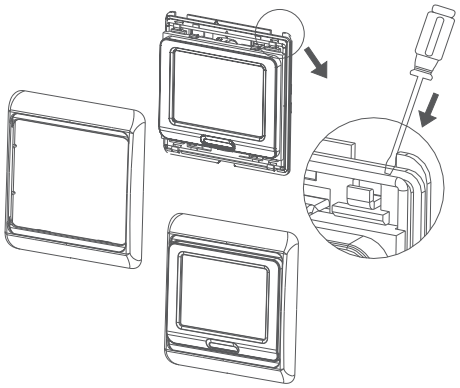

Connecting Diagram

Attention:
The thermostat which connect the electric heating device is apply to full load(3200W) heating cable in 2500m height above sea level,and the rated power of external load should be less than or equal to 80%rated power thermostat when in the 2500m to 4200m height.

M9.713

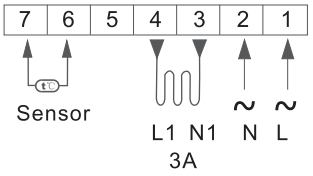

M9.716

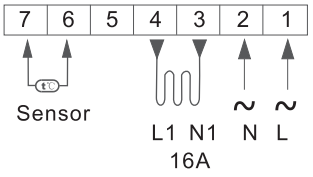

M9.723

